An Adaptive Fuzzy-Based Segmentation Procedure for Stereo Images with an Application to Blind Navigation

Farrah Wong, R. Nagarajan* and Sazali Yaacob
Artificial Intelligence Research Group
School of Engineering and Information Technology
Universiti Malaysia Sabah, Locked Bag 2073,
88999 Kota Kinabalu, Sabah, Malaysia.
*e-mail: nagaraja@ums.edu.my

Abstract - **This paper reports an adaptive fuzzy-based segmentation methodology specially suited for stereo images. This is a part of an effort in developing a stereovision-based aid for blind people to help them in collision free navigation within among obstacles. The segmentation method proposed in this paper is an extension to a previous work utilizing a fuzzy-based approach. However, the previous proposal is not suitable in segmenting poor quality images. Stereo pair images are captured with two cameras setup in parallel configuration. Basically, there are three steps to obtain the segmented images in this adaptive fuzzy image segmentation method. Step 1 involves the threshold computation via the Measure of Fuzziness for the entire image. This image is split into suitable sub-images. This first step is called the "Initial Processing". Next, the subsequent splitting of the sub-images by means of their respective threshold values that are obtained again through the computation of the measure of fuzziness. The process to adaptively segment the sub-images is referred here as the "Sub-image Segmentation". Finally, the step "Region Refining" is undertaken to complete the segmentation procedure. In this step, the output image shall contain only the objects of significant importance to the blind individual. This adaptive fuzzy-based segmentation method is useful in the stereo matching process to determine the disparity and hence, distance information to be given to blind individuals.**

I. INTRODUCTION

Blind navigation is a field of research that focuses on efforts to develop navigation aid for blind people. The aid shall enable the unfortunate blinds to navigate autonomously within and among obstacles. In this paper, a stereovision aid with a neural network calibration methodology is presented. Distance serves as an important indicator for human being to avoid obstacles or to approach an object. The system is implemented with two digital video cameras that are spaced apart and fixed on to a headgear. The initial process in this system is the capturing of a scene by the two cameras. The stereo pair images undergo an image segmentation process and then, the stereo matching process. The processes that follow are obtaining the disparity values and finally, the computation of distance to the nearest object. The distance information is converted into verbal sound for the blinds to understand [1]. The stereo matching process is not discussed in this paper.

In image processing, Fuzzy set theory can be incorporated in handling uncertainties [2,3]. In [4], it is mentioned that there are two types of uncertainties in image processing, that is, vagueness and ambiguity. As an example, the vagueness in gray-level images is due to the multi-level brightness. This contributes to the inability of categorizing a pixel as either white or black. The ambiguity can be the uncertainties in determining the boundaries of different regions. Thus, Fuzzy Image Processing is introduced as an application of Fuzzy Logic technology into the field of Image Processing. Tizhoosh [5] has introduced the term "Fuzzy Image Processing" and defined it as the collection of all approaches that understand, represent and process the images, their segments and features as fuzzy sets.

II. OVERVIEW OF MEASURE OF FUZZINESS

Segmentation via thresholding [6] is the segmentation process of an image using the index of fuzziness to compute the threshold value. The measure of fuzziness is an indication of the degree of fuzziness of a fuzzy set [7]. There are several approaches to compute the threshold value through the measure of fuzziness such as by using the linear or quadratic index of fuzziness, the fuzzy compactness or the index of area coverage [6]. In the segmentation procedure, to be reported in this paper, four methods for the measure of fuzziness are utilized. The methods are Linear Index of Fuzziness, Quadratic Index of Fuzziness, Logarithmic Entropy and Exponential Entropy [5,6,8].

Linear Index of Fuzziness and Quadratic Index of Fuzziness fall into the group called as Index of Fuzziness. Logarithmic Entropy and Exponential Entropy fit into the classification known as Entropy. Index of Fuzziness and Entropy are collectively called as Measure of Fuzziness. The Index of Fuzziness signifies the amount of fuzziness in an image by computing the distance between the gray-level image (fuzzy set) and its nearest ordinary set, that is the binary image (crisp set) [9]. The classical entropy measures probabilistic information, but this entropy utilizes Shannon's function to compute the fuzziness of an image so that the threshold value can be obtained by minimizing the Measure of Fuzziness [9]. The Linear Index of Fuzziness is computed as follows

$$V_l(A) = \frac{2}{n}\sum_{i=1}^{n}[\min\{\mu_A(x_i),(1-\mu_A(x_i))\}] \quad (1)$$

where, x_i : gray value, $\mu_A(x_i)$: the degree of membership of x_i in A and n : number of elements in the threshold range (to be defined latter in this section)

The Quadratic Index of Fuzziness is given by

$$V_q(A) = \frac{2}{\sqrt{n}}\left(\sum_{i=1}^{n}[\min\{\mu_A(x_i),(1-\mu_A(x_i))\}]^2\right)^{0.5} \quad (2)$$

Logarithmic Entropy as defined by De Luca and Termini [10] is

$$H_l(A) = \frac{1}{n}\ln(2)\sum_{i=1}^{n}\{S_n(\mu_A(x_i))\} \quad (3)$$

with Shannon's function,

$$S_n(\mu_A(x_i)) = -(\mu_A(x_i))\ln(\mu_A(x_i)) - \{1-(\mu_A(x_i)\}\ln\{1-(\mu_A(x_i))\} \quad (4)$$

Another entropy, exponential entropy, introduced by Pal and Pal [11] is

$$H_e(A) = \frac{1}{n}(\sqrt{e-1})\sum_{i=1}^{n}\{S_n(\mu_A(x_i))-1\} \quad (5)$$

with Shannon's function,

$$S_n(\mu_A(x_i)) = \mu_A(x_i)e^{1-\mu_A(x_i)} + (1-\mu_A(x_i))e^{\mu_A(x_i)} \quad (6)$$

and e = 2.718.

The aim here is to select the gray value at the minimum fuzziness as the threshold value. The reason for selecting this threshold value is that the image is least fuzzy at that particular measure of fuzziness value and thus gives an appropriate segmentation for the image.

III. THE METHODOLOGY

There are three steps in the adaptive fuzzy-based segmentation procedure as shown in Figure 1. The steps are listed as following:

(i) Step 1: Initial Processing
(ii) Step 2: Sub-image Segmentation
(iii) Step 3: Region Refining

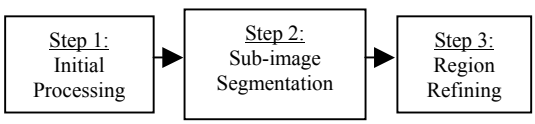

Figure 1 - The Three Main Steps in the Adaptive Segmentation Procedure

Table 1 lists the parameters for image and sub-image sizes used in this segmentation procedure. The parameter Q is selected to represent the size of image and sub-images followed by a number to represent the sub-image size. For example, Q32 means the full image; Q8 is a quad tree sub-image of 8-by-8-sized and so on.

In most of the applications including blind navigation, the images obtained from camera are of poor quality due to external uncontrolled lighting. The conventional non-adaptive fuzzy procedure does not give acceptable image segmentation. In the following part of this section, a procedure for an adaptive fuzzy-based segmentation is developed. The results of the adaptive fuzzy-based segmentation are, then, compared with those of non-adaptive fuzzy-based segmentation procedure.

Table 1 - Image and Sub-images Sizes Representation

Image Size (in pixel)	Parameter
32 X 32	Q32
Sub-images (in pixel)	**Parameter**
8 X 8	Q8
4 X 4	Q4
2 X 2	Q2
1 X 1	Q1

Initially, as in the earlier blind navigation procedure [12], the images obtained from cameras are pre-processed by resizing into a 32-by-32-sized or Q32 image and then converted into gray level images. The subsequent procedures of an adaptive fuzzy-based segmentation on these gray images are described in the following steps.

A. Step 1: Initial Processing

In this step, the threshold known as the Fuzzy Minimum Threshold that is used to split the image into sub-images of Q8 is computed. It is expected that Q8 has a reasonable level of resolution when compared to Q16 and hence, Q16 is not considered. In addition, the processing time for Q8 and its quad tree sub-images till Q1 is faster than that of Q16 and its quad tree images till Q1. The data for computation of the threshold is obtained from the image histogram.

The peak value of the histogram, μ_{max}, and its corresponding gray-value, x_{max}, is obtained from the histogram. These values are used to get the Average (Mean) Threshold as

$$\text{Average Threshold} = \text{round}\left[\left(\frac{(\sum \mu\, x) - \mu_{\max} * x_{\max}}{(\sum \mu) - \mu_{\max}}\right)/4\right] \quad (7)$$

where, x = gray level and μ = corresponding frequency. Equation (7) is named with an average since it is similar to the computation of statistical mean.

The value of the Average Threshold is rounded to the nearest integer value as indicated in Equation (7). The Fuzzy Minimum Threshold may be lesser or more than the Average Threshold, thus, a threshold range is to be identified by obtaining the Center of Gravity. The gray scale is divided into 16 divisions; however, the number '16' is arbitrary and any number preferably a factor of 256 can be used. In this case, the number 16 is found to be reasonable in terms of resolution. For each division, a Center of Gravity is computed by

$$\text{Center of Gravity}, C_g = \frac{\sum \mu\, x}{\sum \mu} \quad (8)$$

The threshold range is obtained by taking the two adjacent Center of Gravity values with respect to the Average Threshold and indicated as the left adjacent Center of Gravity and right adjacent Center of Gravity. This is illustrated in Figure 2. A Fuzzy Minimum Threshold, T, is obtained at the

gray value which occurs at the minimum value of the Measure of Fuzziness. Any one of the four Measures of Fuzziness can be considered. If $max_b - min_b > T$ [13] where, max_b = maximum intensity value in the block and min_b = minimum intensity value in the block, then, the original image is divided into sub-images. The sub-images are obtained using the quad tree method [14]. The process of dividing sub-images is continued until (2^n X 2^n) sub images are reached. In this work, n = 3 is considered. By repeatedly applying this threshold value, T, in the quad tree method, the image is split into 16 numbers of Q8 sub-images.

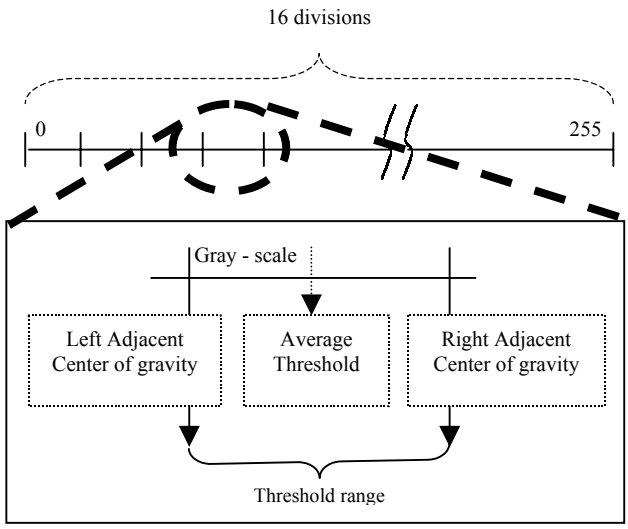

Figure 2 - Illustration to Find the Threshold Range

B. Step 2: Sub-images Segmentation

In this step, the main process is to obtain the Sub-image Fuzzy Minimum Threshold value for each of the sub-images of Q8 and to segment them. The steps are repeated on each of the Q8 sub-images in order to find their respective Sub-image Fuzzy Minimum Threshold values. By applying these individual Sub-image Fuzzy Minimum Threshold values, T_1 to T_{16}, into the quad tree method, the segmentation on the sub-images is performed. When all quad tree sub-images are put together, we get a Q32 quad tree image.

C. Step 3: Region Refining

The quad tree method in Step 2 has created a segmented image that contains highlighted edges of objects from the foreground and also from the background. In this step, this segmented image will be refined so that it contains only object or objects in the foreground. The region-refining step is made up of two parts. Part 1 is the process to identify the locality of the foreground object(s). Part 2 consists of the growing process that increases the size of the foreground object(s) into its original size.

The procedure in Part 1 is carried out upon the Q8 sub-images and also on the Q4 sub-images. The Q8 sub-images have been obtained in Step 2. All the Q8 sub-images are sub-divided into Q4 sub-images. Thus, there are four blocks of Q4 sub-images in every Q8 sub-image. The process to obtain the locality of foreground object(s) is illustrated in Figure 3. The division from the Q8 sub-images into Q4 sub-images are shown in Figure 3 (a) and (b). The Mean Value of Intensity (M_{ij} for i,j = 1,2,3,4) for all the Q2 blocks in the Q4 sub-images are computed as illustrated in Figure 3(c). From the Mean Values of Intensities, the Local Mean of Intensity is obtained. Then, the Absolute Difference is computed. A parameter, Index Value, is used to identify the relevant case for comparison in the Rule-based method. A rule-based method (discussed in the latter part of this section) is used to identify the locality of the foreground object(s). The rule-based type segmentation method has also been reviewed in [15]. A new set of rules in this work is formed after a series of experimentation with more than 50 images.

The following parameters are required for comparison in the rule-based method:

$$\text{General Threshold} = fix\left[\frac{x_{\max} - x_{\min}}{8}\right] \tag{9}$$

where, fix is rounding towards zero, x_{max} : the maximum gray value in the original Q32 image and x_{min} : the minimum gray value in the original Q32 image.

An example of the computation of the Mean Value of Intensity, M_{i3} (Figure 3(c)) with the intensity values A, B, C and D in a Q2 block is by

$$M_{i3} = \left[\frac{A+B+C+D}{4}\right] \tag{10}$$

where, 3 is the 3rd quadrant in a Q4 sub-image and i represents the quadrant in a Q8 sub-image, i = 1,2,3,4. In a similar way, all M_{ij} where, i, j = 1 to 4 are computed.

Then, the Local Mean of Intensity, L_1 to L_4, for all the Q4 sub-images are computed as

$$L_i = \left[\frac{M_{i1}+M_{i2}+M_{i3}+M_{i4}}{4}\right] \tag{11}$$

where, i = 1 to 4.

In every Q4 sub-image, four absolute differences are obtained by subtracting the Mean Value of Intensity from the Local Mean Value of Intensity as follows:

$$\text{Absolute Difference} = \left|L_i - M_{ij}\right| \tag{12}$$

where, symbol | | represents absolute value, i and j = 1 to 4.

Another parameter "Index Value" is defined. The index value is available from quad tree representation, 'qtdecomp' [13]. The index value is placed by 'qtdecomp' at the top left corner of a sub-image. The index values 8, 4, 2 and 1 are discussed in the following cases.

<u>Case 1: Index Value = 8</u>

If the Q8 sub-image is having an index value of 8, it means that the whole block of this Q8 sub-image has uniform gray-values and they, obviously, belong to the same region or object. Thus, only one comparison between the Absolute Difference and General Threshold in Q4 sub-image needs to be made.

The IF-THEN rule is as follows

IF, Absolute Difference ≤ General Threshold;

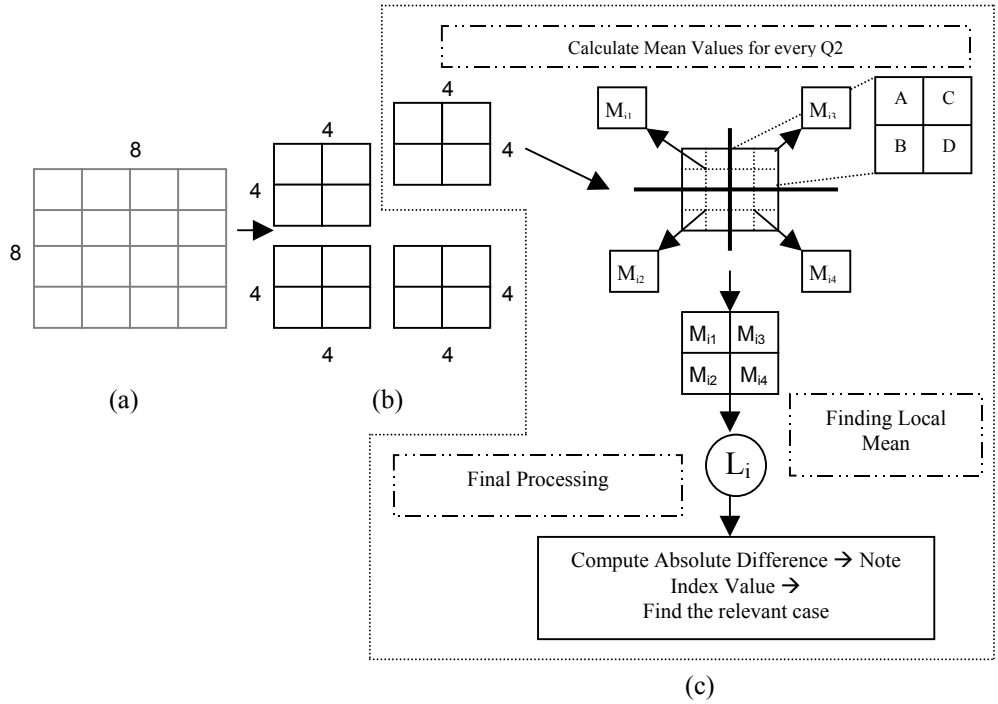

Figure 3 - The Process of Obtaining the Locality of Objects
(a) Q8 Sub-images (b) Q4 Sub-images (c) Calculation of Mean Value and Local Mean, Finding Absolute Difference, Note the Index Value and Find the Relevant Case

THEN, Q8 sub-image is darkened,
ELSE, Q8 sub-image is whitened.

If Q8 sub-image is whitened, this Q8 is an object or has a part of an object.

Case 2: Index Value = 4

Each of the Q4 sub-images has to be compared between the Absolute Difference and General Threshold. The comparison rule is similar to Case 1.

IF, Absolute Difference ≤ General Threshold;
THEN, Q4 sub-image is darkened,
ELSE, Q4 sub-image is whitened.

That is, the comparison repeats until all the 4 blocks of Q4 sub-images have been examined.

Case 3: Index Value = 2

Comparison between the Absolute Difference and General Threshold is undertaken on all the 4 blocks of Q2 sub-images. In each Q2 block,

IF, Absolute Difference ≤ General Threshold;
THEN, Q2 sub-image is darkened,
ELSE, Q2 sub-image is whitened.

Case 4: Index Value = 1

The following rules will apply

IF, Absolute Difference ≤ General Threshold;
THEN, the pixel is darkened,
Else, the pixel is whitened.

Here, the Absolute Difference is $|L_1 - A|$; A = Intensity Value of Pixel.

The following are rules that are outlined for this Case:

(a) In a Q4 sub-image,
IF, only 2 pixels or less are white;
THEN, Q4 sub-image is darkened.

(b) In a Q2 block,
IF, the block is whitened AND
Absolute Difference < General Threshold;
THEN, Q2 sub-image is darkened.
(as it contains the background)

Here, the Absolute Difference is $|L_i - M_{ij}|$; i, j = 1, 2 3, 4.

(c) In a Q4 block,
IF, an isolated white pixel being surrounded by black pixels;
THEN, the white pixel is darkened.

This white pixel is considered as a noise pixel. The rules in this Case are more than the other cases since these smaller blocks can represent important details such as edges, object pixels as well as background pixels.

After going through the process in Part 1, a new Q32 binary image is obtained. A growing process in this new image is then performed. The new Q32 image is sub-divided into 4 blocks of 16-by-16-sized sub-images. The sum of all the whitened pixels in all the 4 blocks is obtained. If this sum is less than or equal to a specified value (here, it is selected as 30) then, the pixels are grown in a specified range by adding of a white pixel around its border. If the sum is more than 30, an additional search area is implemented by adding an extra of 5 rows and 9 columns to the current range. This row and column, 5 and 9 respectively, has been ascertained through a series of experiments. However, these numbers are subjective and can be selected depending upon

type of images. Finally, we obtain the required form of the 32-by-32-sized segmented image.

There are 19 thresholds used in the whole segmentation procedure. The application of these thresholds in the procedure is outlined as follows:

(i) In Step 1, one threshold (T) is used for segmenting the image and another threshold (Average Threshold) is used to obtain the threshold range.

(ii) In Step 2, sixteen thresholds (T_1 to T_{16}) are used to segment each of the sub-images.

(iii) In Step 3, one threshold (General Threshold) is used for refining the segments.

IV. Results

The output from this segmentation process has the background subtraction property. This property enables a faster stereo matching process for obtaining disparity and distance. The background subtraction is opted due to the reason that background objects that may not provide immediate information in the decision making of a blind individual during his/her navigation. Since the unfortunate blind people cannot see, it is better to filter the information and provide only the most relevant information to them. In this study, only indoor scenes are taken as image samples.

A. Comparison Between the Adaptive and Non-Adaptive Methods

The performance of adaptive fuzzy segmentation procedure is now compared with that of the conventional fuzzy segmentation procedure reported in [15]. The non-adaptive segmentation is an automated threshold calculation. The threshold value computed by utilizing the histogram of the image and the measure of fuzziness constitute the initial step in the proposed segmentation procedure. The threshold value is then inputted into the "split and merge" method of segmentation.

The segmentation results for the non-adaptive method show that the method cannot segment the images with a single threshold despite showing a minimum value in the plot of measure of fuzziness. The gray level that occurred at the minimum of fuzziness is selected as the threshold. Figure 4 shows the comparison between the adaptive and non-adaptive method. The non-adaptive method generally is not efficient in producing a correct segmented image.

B. Illustrations of the Methodology

Figure 5 shows the illustration of the adaptive fuzzy-based segmentation procedure for a stereo pair of left and right images. By using the quad tree method, the quadrants of 8-by-8-sized are segmented as depicted by the process in Figure 5 (a). The process in Figure 5 (b) is to find the locality of the object. After obtaining the locality, a refinement process is undertaken as shown in Figure 5(c). Finally, the procedure ends after the region growing process in Part 2 of Step 3. The last two images in Figure 5 are the output obtained by overlapping the left and right images respectively with their segmented black-and-white images.

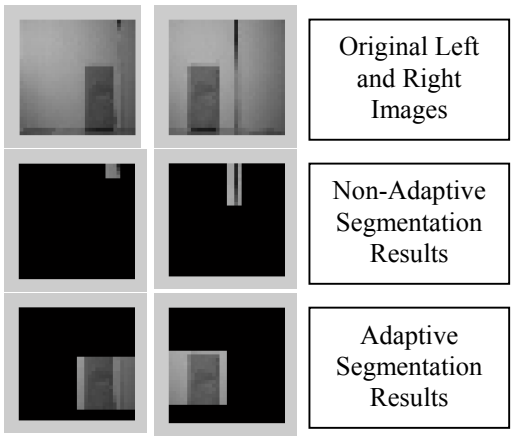

Figure 4 - Comparison between the Non-Adaptive and Adaptive Segmentation

V. Conclusions

The adaptive fuzzy-based segmentation procedure creates a feel of “blockiness” in the final output image. This is due to the application of the quad tree method. Haralick and Shapiro [16] have also pointed out the “blockiness” factor in their work of quad tree method. The non-adaptive fuzzy-based segmentation was not able to segment the sample images. One of the reasons is that, the images are not generally of good quality. This has resulted in the inability to highlight edges as provided by the quad tree method. On the other hand, the adaptive fuzzy-based segmentation method can tolerate even the not-too-good quality images by having a locally based threshold values that are less sensitive by the lower quality of image. This adaptive fuzzy-based segmentation method is useful in the stereo matching process. The matching procedure facilitates the disparity computation. The disparity is then used in obtaining the distance between the object and the cameras. In the real-time system, the processing time of the aid is around 1 to 1.5 seconds. This processing time includes the processes of capturing the images until the production of the structured and verbal description sound.

VI. Acknowledgement

The authors express their gratitude to MOSTI, Malaysia for the funding under the IRPA Code No. 03-02-10-0043/EA0041 through UMS. The first author is grateful to the study leave and scholarship extended by UMS.

VII. References

[1] F. Wong, R. Nagarajan, and Sazali Y. Application of Stereovision in a Navigation Aid for Blind People, Proceedings of Fourth International Conference on Information, Communications & Signal Processing and Fourth IEEE Pacific-Rim Conference On Multimedia,

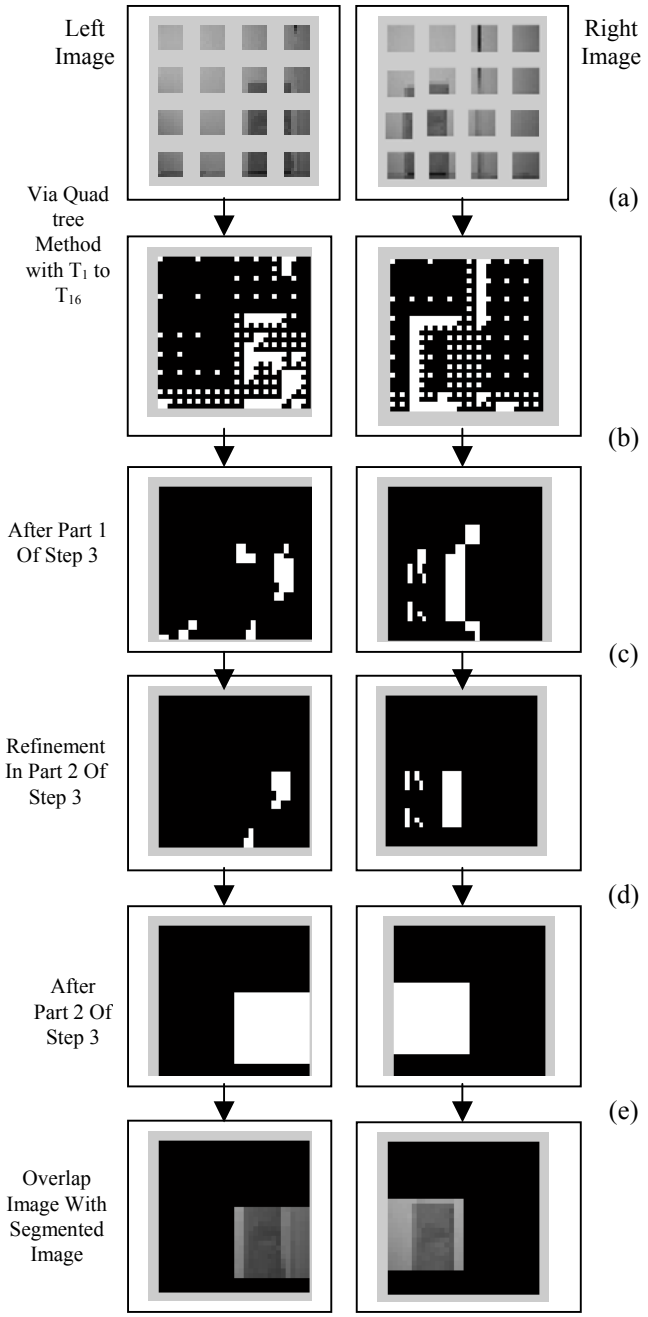

Figure 5 - The Illustrations for the Adaptive Fuzzy-based Segmentation

Singapore, Paper No. 2A2.3 (CD-ROM), December 15-18, 2003.

[2] N.R. Pal, and S.K. Pal. A Review On Image Segmentation Techniques, *Pattern Recognition*, Vol. 26, No. 9, pp. 1277-1294, 1993.

[3] H.R. Tizhoosh. Fuzzy Image Processing: Potentials and State of the Art, 5th International Conference on Soft Computing (IIZUKA'98), Iizuka, Japan, vol. 1, pp. 321-324, October 16-20, 1998.

[4] M.G. Forero-Vargas, and O. Rojas-Camacho. New Formulation In Image Thresholding Using Fuzzy Logic, Proceedings of II Latin American Congress on Biomedical Engineering, Havana, Cuba, Article No: 00454, May 23rd - 25th, 2001.

[5] H.R. Tizhoosh. *Fuzzy Image Processing: Introduction In Theory And Practice*, Springer-Verlag, 1997.

[6] J.C. Bezdek, J. Keller, K. Raghu and N.R. Pal. *Fuzzy Models And Algorithms For Pattern Recognition And Image Processing*, Kluwer Academic Publishers, Boston, 1999.

[7] H.J. Zimmermann. *Fuzzy Set Theory And Its Application*, 2nd Ed., Allied Publishers Ltd. and Kluwer Academic Publishers, New Delhi, 1996.

[8] S.K. Pal, and D.D.K. Majumder. *Fuzzy Mathematical Approach to Pattern Recognition*, *Wiley Eastern Ltd.*, New Delhi, pp. 137-141, 1986.

[9] L-K. Huang and M.J. Wang. Image Thresholding By Minimizing The Measures Of Fuzziness, *Pattern Recognition*, vol. 28. no. 1, pp. 41-51, 1995.

[10] J.R. Parker. *Algorithms For Image Processing And Computer Vision,* John Wiley & Sons, New York, pp. 116-149, 1997.

[11] N.R. Pal and S.K. Pal. A Review on Image Segmentation Techniques, *Pattern Recognition*, vol. 26, No. 9, pp. 1277-1294, 1993.

[12] F. Wong. *Development of Image Processing Software for an Audible Aid to Autonomous Navigation of Blind Individual*, Master Degree Thesis, Universiti Malaysia Sabah, Malaysia, 2001.

[13] The MathWorks Inc. *Image processing toolbox user's* guide, 1997.

[14] G. X. Ritter. *Handbook of Computer Vision Algorithms in Image Algebra*, CRC Press, Boca Raton, pp. 125 – 141 and 271 – 273, 1996.

[15] F. Wong, R. Nagarajan, Sazali Y., A. Chekima and N-E. Belkhamza. An Image Segmentation Method Using Fuzzy-Based Threshold, Sixth IEEE International Symposium on Signal Processing and its Applications (IEEE ISSPA 2001), vol. 1, pp. 144-147, Kuala Lumpur, Malaysia, August 2001.

[16] R.M. Haralick and L.G. Shapiro. *Computer and Robot Vision*, vol. 1, Addison-Wesley Pub. Co., Reading, 1992.